HPP | GASOLINE ENGINE DRIVEN PUMPS - GENERAL DUTY HIGH FLOW

Working pressure 10000 psi

Two stage operation

Choice of 6.6, 10.56 or 15.84 gallons oil reservoir

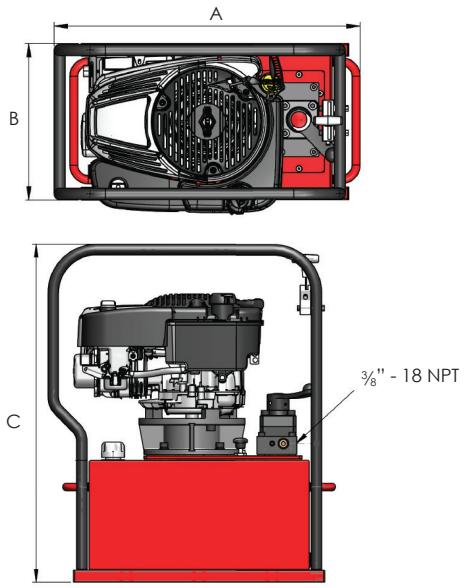

- Choice of 2, 3 or 4-way manual control valves with load holding feature on 3 & 4-way versions
- Externally adjustable pressure relief valve for pressure setting up to a maximum of 10000 psi
- Factory fitted roll bar protection frame included

Model number	Valve type	Oil capacity (gallons)	Maximum flow rate (in³/minute) 1st stage	2nd stage	Weight (lbs)	Dimensions (in) A	B	C
HPP21012	P-T Plate	6.6	610.24	79.33	155.4	22.46	12.06	27.03
HPP21014	P-T Plate	10.56	610.24	79.33	188.5	22.46	12.06	31.32
HPP21016	P-T Plate	15.84	610.24	79.33	250.2	22.97	16	32.15
HPP21022	2-way	6.6	610.24	79.33	156.5	22.46	12.06	27.03
HPP21024	2-way	10.56	610.24	79.33	189.6	22.46	12.06	31.32
HPP21026	2-way	15.84	610.24	79.33	251.3	22.97	16	32.15
HPP21032	3-way	6.6	610.24	79.33	156.5	22.46	12.06	27.03
HPP21034	3-way	10.56	610.24	79.33	189.6	22.46	12.06	31.32
HPP21036	3-way	15.84	610.24	79.33	251.3	22.97	16	32.15
HPP21042	4-way	6.6	610.24	79.33	156.5	22.46	12.06	27.03
HPP21044	4-way	10.56	610.24	79.33	189.6	22.46	12.06	31.32
HPP21046	4-way	15.84	610.24	79.33	251.3	22.97	16	32.15

WHEEL TROLLEY

Model number	Description
PPA40WT	Wheel trolley for all pumps with 10.56 gallons oil reservoir
PPA60WT	Wheel trolley for all pumps with 15.84 gallons oil reservoir

All 40L and 60L HPP pumps can be supplied with a factory fitted wheel trolley. Just suffix model number with 'WT'.